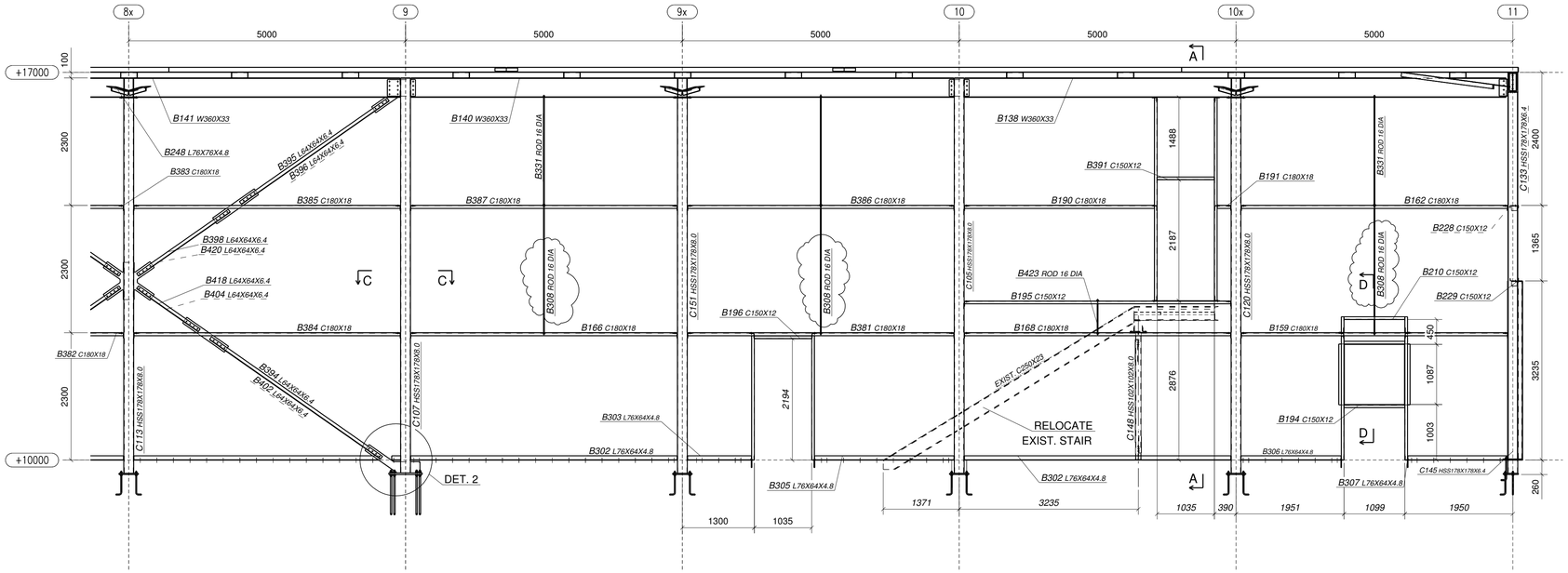

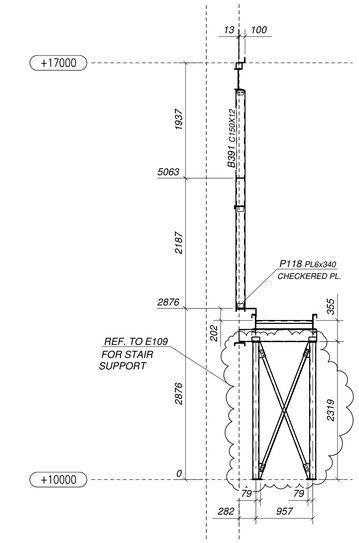

A - A

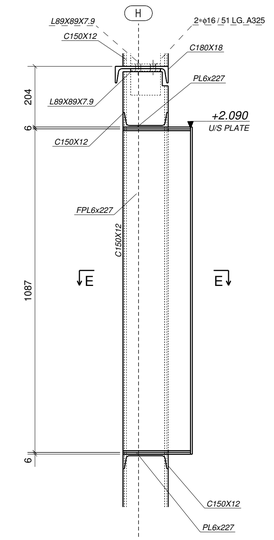

D - D

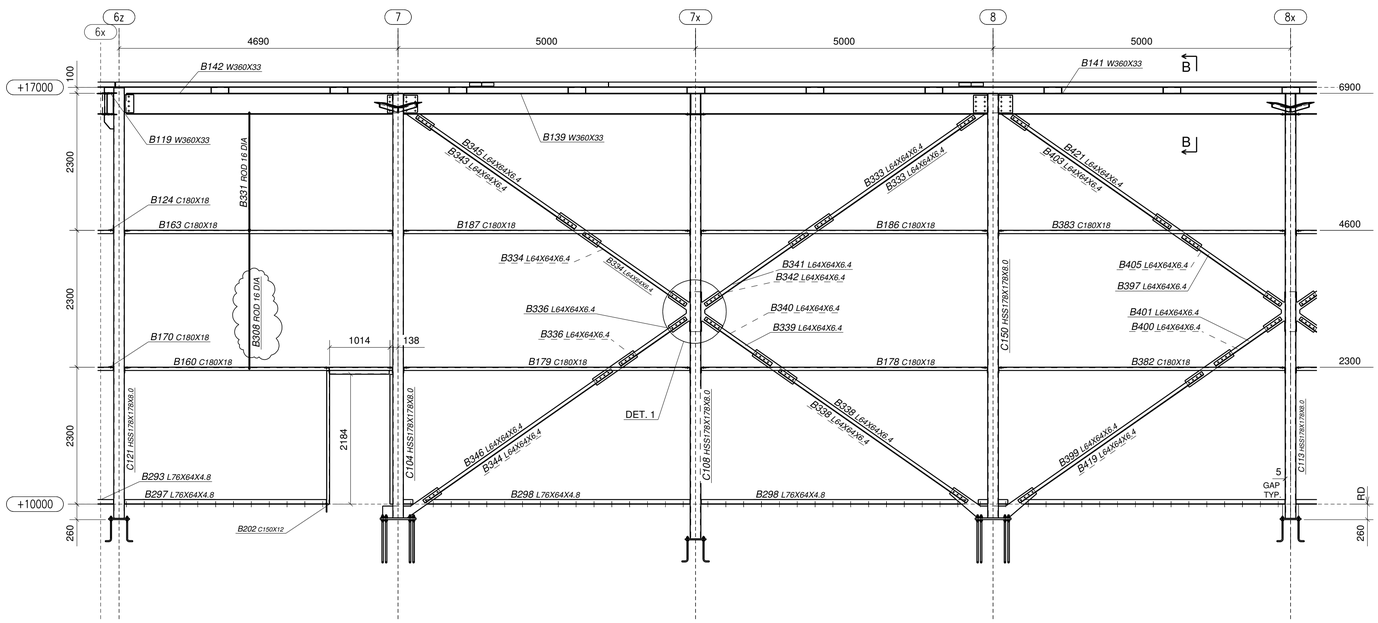

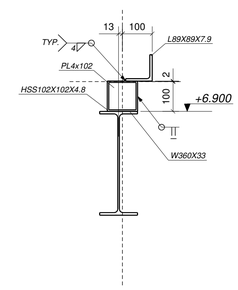

B - B

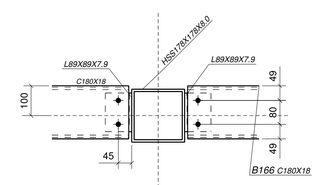

(TYP.)

C - C

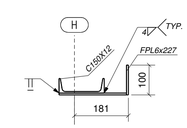

E - E

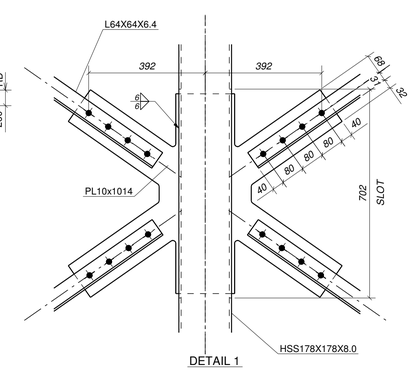

DETAIL 1

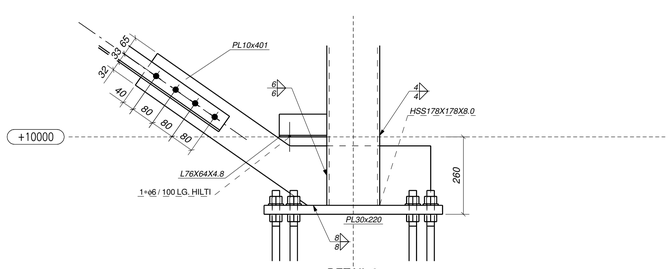

DETAIL 2

PLEASE VERIFY ALL CLOUDED AREAS AND BOXED DIMENSIONS

"CLOUDED AREAS NOT ANSWER SHALL BE CONSIDERED CORRECT" AS WRITTEN OR SHOWN

C	2007-06-27	PART MARKS UPDATED
B	2007-05-10	RE-IFA; WALL BRACES AND DOOR JAMB RELOCATED
A	2007-03-21	ISSUED FOR APPROVAL

SHOP PAINT:

NO BACK CHARGES WILL BE ACCEPTED WITHOUT PRIOR AUTHORIZATION IN WRITING

NOTE:

TEKLA Xsteel®

BELAIR FABRICATION LTD.

PACIFIC Detailing inc.
1667 - Columbia Street, North Vancouver BC, V7J 1A5
Phone# 604-924-0049, Fax# 604-924-0846

JOB NAME & LOCATION:
RETAIL STORE & SERVICE CENTRE
White Rock
British Columbia

ARCH. Quinn Young Architects Ltd.
6223-2nd Street S.E. Calgary, Alberta
ENGR. Y&V Engineering Ltd.
33 Ferrier St. Markham, Ontario
CONTR. Canadian Tire Corporation Ltd.

REF: S01 u/l S05; A00 u/l A14

JOB NO. KW0025

DRAWN BY: LRI 02/20/2007 CHECKED BY: LJK 03/21/2007

DWG. NO. E104 C

SHEET TITLE
BUILDING ELEVATION AT GRID LINE 'H'

MODIFIED DATE: 06/27/2007 LAST PLOT DATE: 05/11/2007 CAD FILENAME: KW-0025