GRID LOCATION	BOTTOM ELEVATION
E/6-5	99'-11"1/4

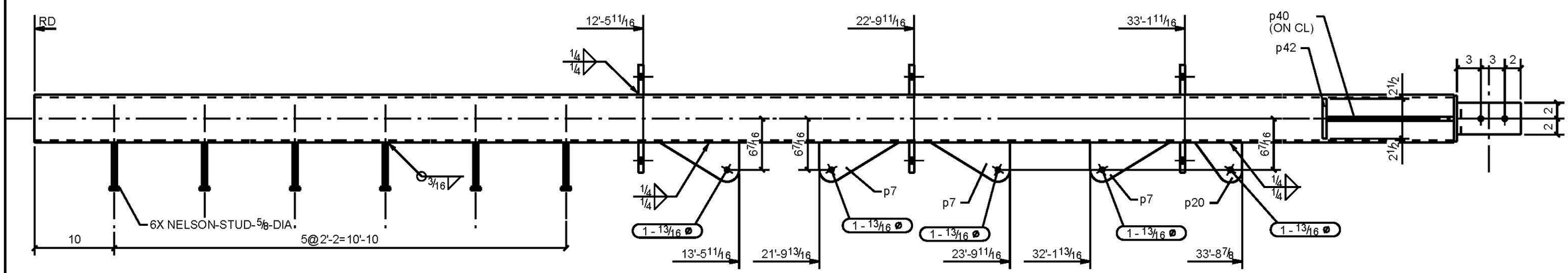

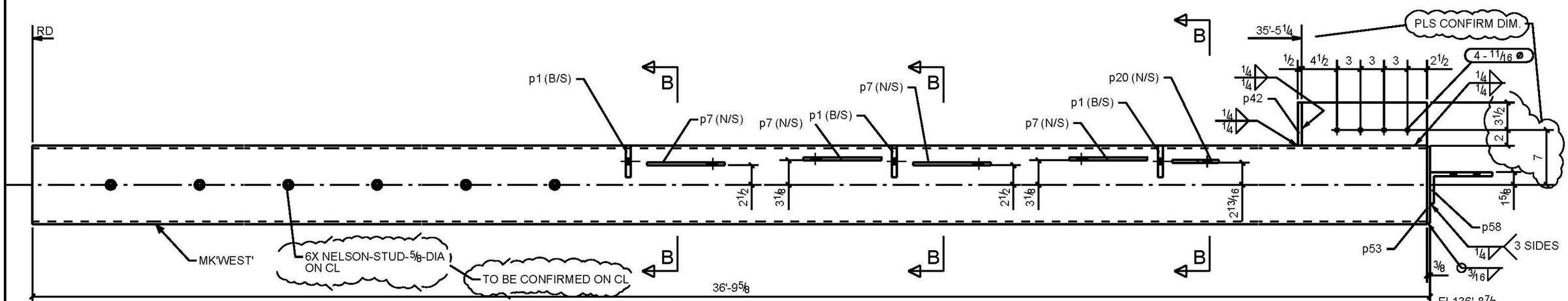

ONE - COLUMN - C4

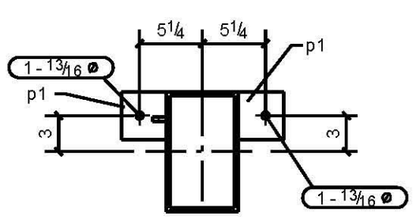

B - B

BILL OF MATERIAL

MARK	QTY	DESCRIPTION	LENGTH	WEIGHT	REMARKS
C4	1				SQ-2
c4	1	HSS10X6X5/16	36'-9 1/4"	1096	350W
p1	6	FL5/8"X3 3/4"	0'-4"	16	A36
p7	4	PL3/8"X4 15/16"	0'-9 15/16"	12	A36
p20	1	PL3/8"X5"	0'-5 15/16"	2	A36
p40	1	FL1/2"X5 1/2"	1'-4"	12	A36
p42	1	FL1/2"X5"	0'-5 1/2"	4	A36
p53	1	PL3/8"X5 3/4"	0'-9 3/4"	6	A36
p58	1	L8X4X1/2	0'-4"	7	A36
	6	NELSON-STUD-5/8-DIA	0'-6"	4	
		TOTAL WEIGHT THIS DRAWING		1159	

REV	DESCRIPTION	DATE
A	Issue for Approval	11/18/08
0	Issue for Tower Construction	03/22/2009

BELAIR FABRICATION LTD
Tel: (604) 924-0845 Fax: (604) 924-0846
STEELHEAD INDUSTRIES LTD
Tel:(604) 980-3031 Fax:(604) 980-3031

ARCH.:
Gordon Mackenzie Architect Inc
Tel: (604) 688-3080 Fax: (604) 688-3085

PACIFIC Detailing Inc.
1667 Columbia Street North Vancouver BC V7J 1A5
Phone: (604) 924-0049 Fax: (604) 924-0846

PROJECT NAME	HOLIDAY INN	ADDRESS	39400 DISCOVERY WAY, SQUAMISH, B.C.
DESCRIPTION	COLUMN		
DRAWN BY	BL	JOB No.	DWG No.
DATE DRAWN	11/19/2008	PRO:#518	C4